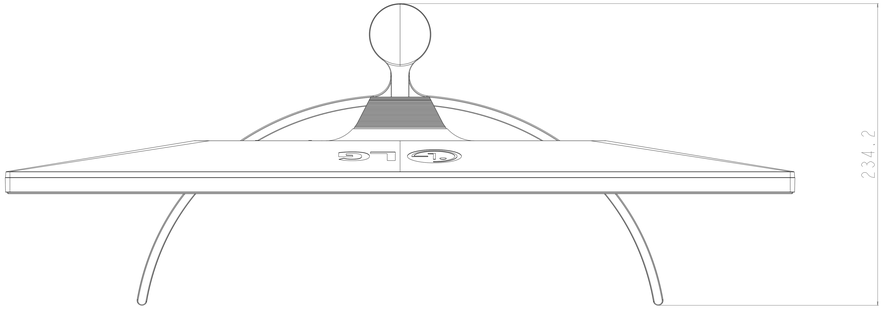
234.2

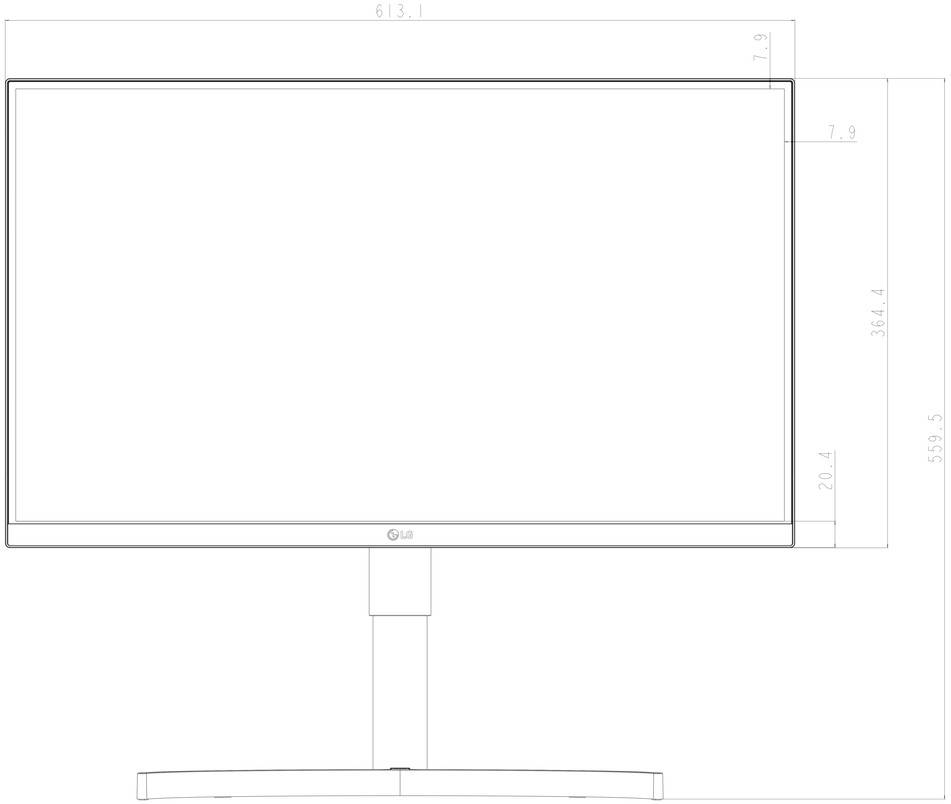
613.1
7.9
7.9
364.4
559.5
20.4

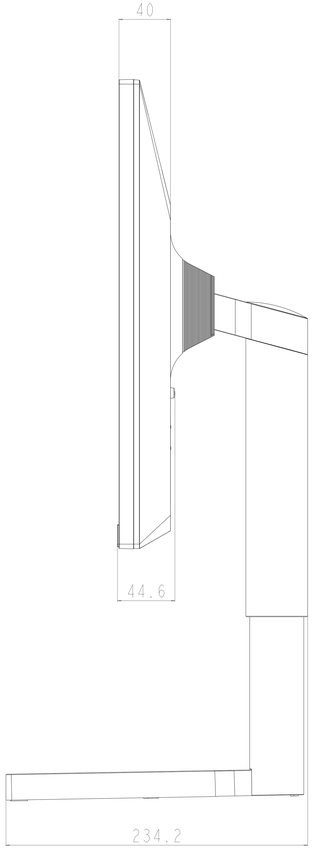
40
44.6
234.2

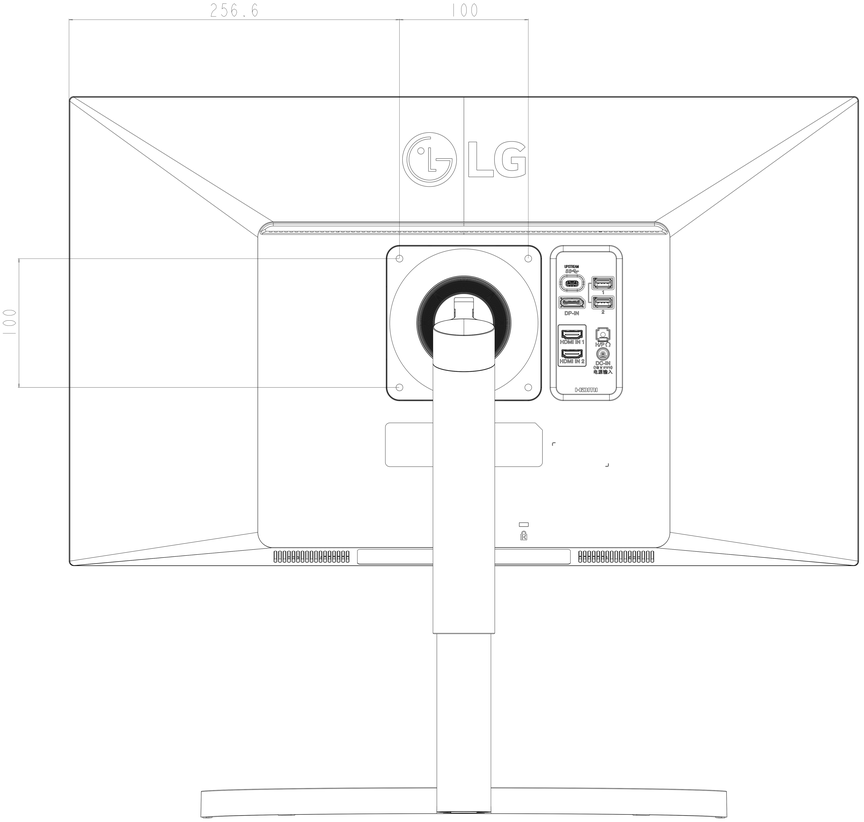
256.6
100
100
LG
DP-IN
HDMI IN 1
HDMI IN 2

73